ARTENA

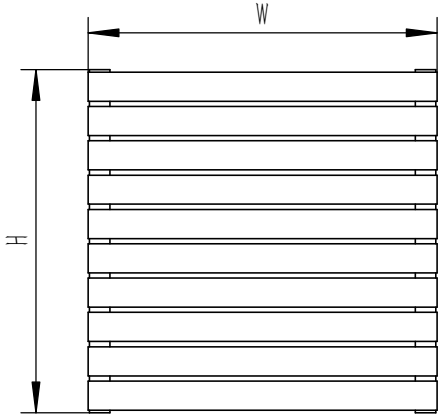

FRONT VIEW

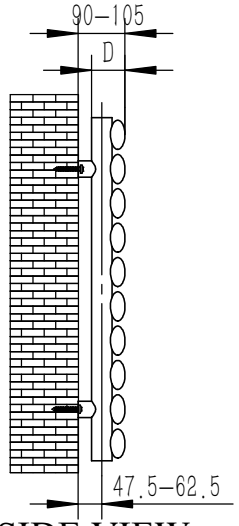

SIDE VIEW

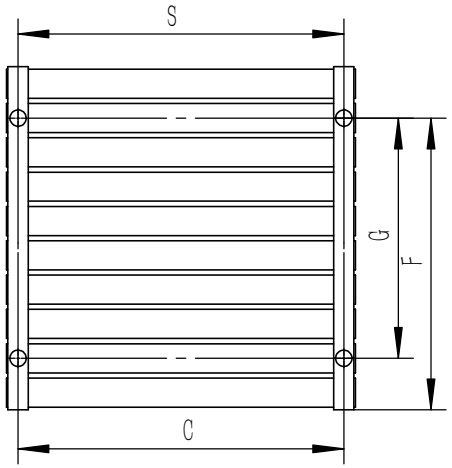

BACK VIEW

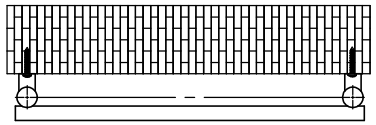

TOP VIEW

SUPPLIED INSTALLATION ACCESSORIES

ALEN KEY 1PCS

SMALL SCREW 4PCS

WALL PLUG 4PCS

POLISHING CLOTH (Brush)1PCS

AIR VENT 1PCS

SCREW 4PCS

BRACKET 4PCS

WALL BRACKET 4PCS

- -Vertical Mounting
- -Optional 304 QUALITY STAINLESS STEEL RADIATOR (RNS-AT906P/B:ARTENA RADIATOR)
- -POLISHED
- -MAX Operational Pressure:10Bar
- -Inlet/Outlet:1/2"Female Pipe Thread
- -All Dimensions are in mm

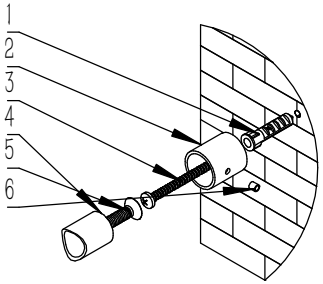

Product Name	Product Code	Height	Width	Thickness	Plumbing Axes Center to Center	Hanger Axes Horizontal	Hanger To Buttom of the Product	Hanger Axes Vertical	Water Volume	Empty Weight	Thermal Output
		H	W	D	C	S	F	G	-	-	Wat-Btu/hr(Δ50°)
		mm	mm	mm	mm	mm	mm	mm	L	kg	
RNS-AT904P/B	**ARTENA/ S-904_P+B**	590	400	58	355	270	501.5	472	4.5	4.5	292-996
RNS-AT906P/B	**ARTENA/ S-906_P+B**	590	600	58	555	470	501.5	472	6.2	6.2	407-1388
RNS-AT908P/B	**ARTENA/ S-908_P+B**	590	800	58	755	670	501.5	472	7.9	7.9	521-1777
RNS-AT910P/B	**ARTENA/ S-910_P+B**	590	1000	58	955	870	501.5	472	9.6	9.6	636-2170
RNS-AT912P/B	**ARTENA/ S-912_P+B**	590	1200	58	1155	1070	501.5	472	11.3	11.3	750-2550

REINA

www.reinadesign.co.uk | info@atayglobal.com | TEL:+44 1787 238540