HAVERLAND®

Instruction manual

Pure Air Box
by HAVERLAND®

heatershop
HEATING YOUR HOME FOR LESS

www.heatershop.co.uk
01473 276686

CE

www.haverland.com
www.haverland.co.uk

INDEX

1. Welcome 3
2. Introduction 3
3. Positioning 4
4. Power connection 4
5. Control panel 5
6. Remote control 6
7. Parts 6
8. Maintenance 7

INTRODUCTION

EN

PLEASE READ THESE INSTRUCTIONS CAREFULLY FOR A CORRECT USE OF THE APPLIANCE.

1. WELCOME

Thank you for purchasing the new Pure Air Box.

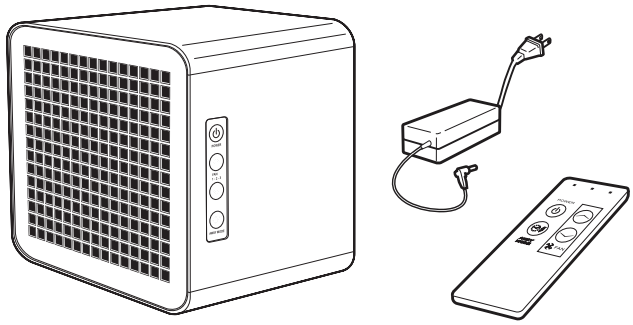

Fig. 1

Your Pure Air Box includes a remote control and power cord.

2. INTRODUCTION

Meet your Pure Air Box

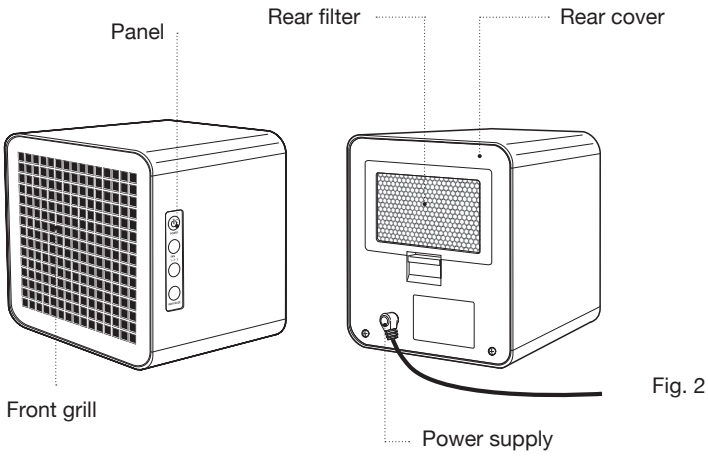

Fig. 2

3. POSITIONING

Where to position your Pure Air Box?

For best results, place your Pure Air Box as high as possible, with at least 2 inches clearance on both sides of the appliance. You can also place your Pure Air Box in problematic areas for extra effectiveness.

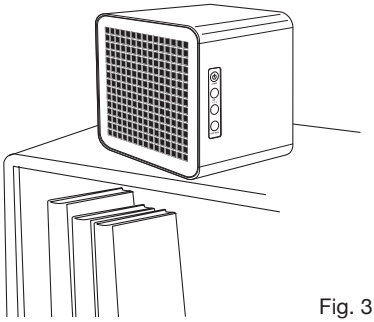

Fig. 3

Do not operate the Pure Air Box near a heat source, flames, combustible vapors or gases.

4. POWER CONNECTION

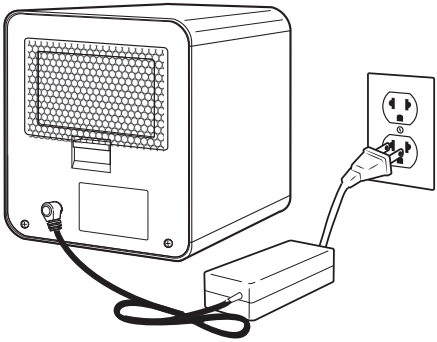

Plug power supply into the back of the Pure Air Box and into a standard wall outlet.

SPECIFICATIONS:

100 – 240 V AC

21 W (power consuption)

Fig. 4

5. PANEL

The panel is conveniently located on the right hand side of your Pure Air Box.

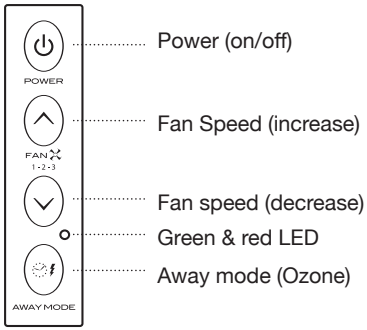

Fig. 5

Red LED = Away Mode (Ozone) (returns to Normal Mode **after 2 hours).**

Green LED = Away Mode (Ozone) **in continuous operation.**

Press the **POWER** button to turn the unit on and off.

- **Normal mode: "PCO™ Tecnology":**

Disinfects and purifies the air you breathe and the surfaces you touch **24/7!** It uses PCO™ technology to produce low levels of natural oxidants and superoxide ions **for daily use with people and animals indoors.** 3 speeds available.

Press the **FAN** buttons to adjust the 3 speed fan.

- **"Away Mode" (Ozone):**

Press the **"AWAY MODE" button once** and the unit will go into the **ozone mode for 2 hours timer.** Indicator light will be illuminated red.

Press the **"AWAY MODE" button a second time** and the unit goes into the **ozone mode in continuous operation.** Indicator light will be illuminated green.

Press the **"AWAY MODE" button again** and the unit will revert to the "Normal" operation mode.

In the ozone mode in continuous operation, the unit will operate at a capacity of 20% on and 80% off, for a 1 minute cycle. This means that the appliance will turn on the ozone plate for 12 seconds and then it will turn it off for 48 seconds, then the cycle will be repeated.

"Away Mode" is intended for unoccupied spaces only. Please make sure all people and pets have vacated the area when "Away Mode" is in use.

Ventilate the room once the "Away" Mode is finished.

EN

6. REMOTE CONTROL

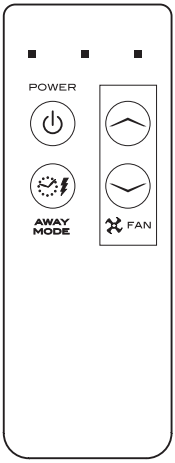

Power (on/off)

Away mode

Fan speed increase

Fan speed decrease

Fig. 6

The remote control gives you the option of controlling the appliance from anywhere in the room. Before using it, please remove the paper tab from the bottom of the remote. When replacing the battery, choose a 3 Volt lithium cell CR2025.

7. PARTS

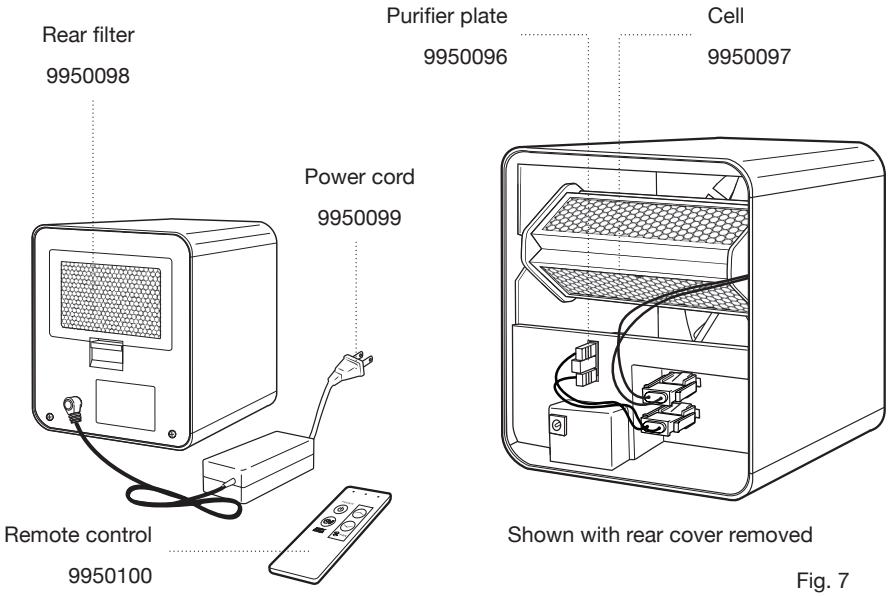

Fig. 7

8. MAINTENANCE

8.1 Maintenance instructions:

	Every month	Every year	Part numbers
Clean front grill	●		
Clean rear filter	●		9950098
Clean purifier plate	●		9950096
Replace Cell		●	9950097
Replace purifier plate		●	9950096

Maintenance

Periodically vacuum or wipe the front grill with a soft towel. You can vacuum or wash the rear filter in warm water and let dry completely before reinstalling (replace if necessary). Wipe down the outside with a damp (not wet) cloth. Reassemble when finished.

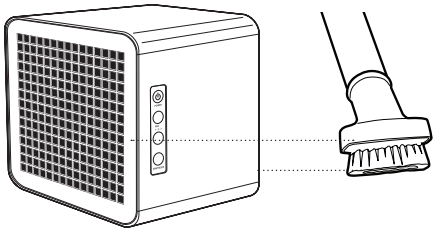

Fig. 8

NOTE:

Failure to follow the indicated maintenance instructions can cause the appliance to malfunction and even damage the unit.

ALWAYS unplug the power cord from the back of your Pure Air Box before doing any maintenance. Removing the cover may expose ultraviolet light source. To protect against eye damage, always unplug before doing any maintenance.

8.2 How to change the cell:

ALWAYS unplug the power cord from the back of your Pure Air Box before doing any maintenance. Removing the cover may expose ultraviolet light source. To protect against eye damage, always unplug before doing any maintenance.

Unplug unit.

(1) Remove the back panel screws and (2) back panel.

(3) Press latches and (4)unplug the cell power connector.

(5) Pull the cell straight out to remove. Reverse order to replace cell.

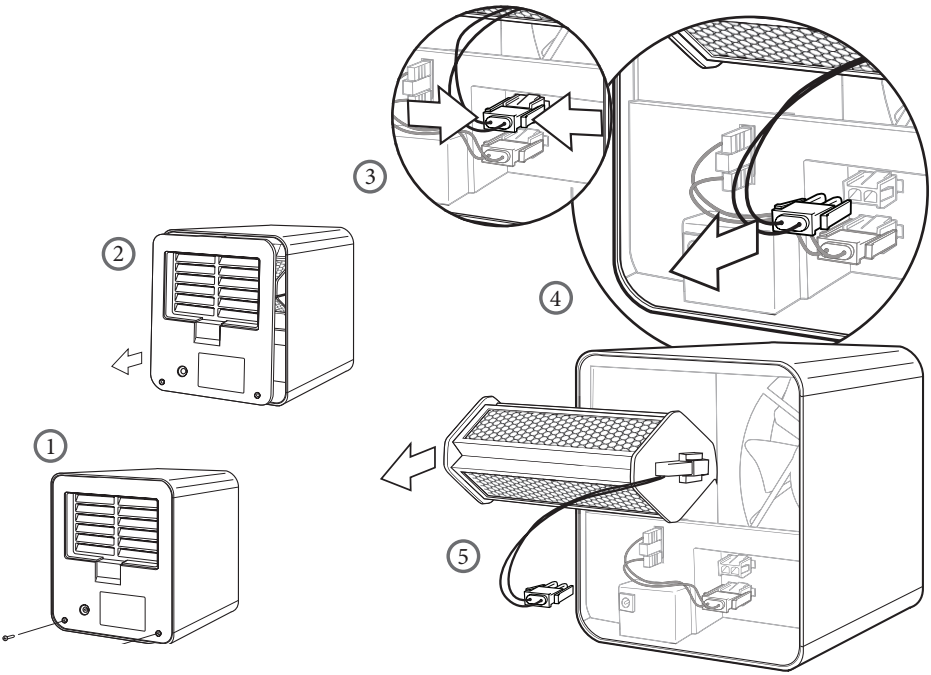

Fig. 9

8.3 How to change purifier plate:

ALWAYS unplug the power cord from the back of your Pure Air Box before doing any maintenance. Removing the cover may expose ultraviolet light source. To protect against eye damage, always unplug before doing any maintenance.

Unplug unit. (1) Remove the back panel screws and (2) back panel.

(3) Press latches and (4) unplug the purifier plate power connector.

(5) Remove the purifier plate from its slot. Reverse order to replace purifier plate.

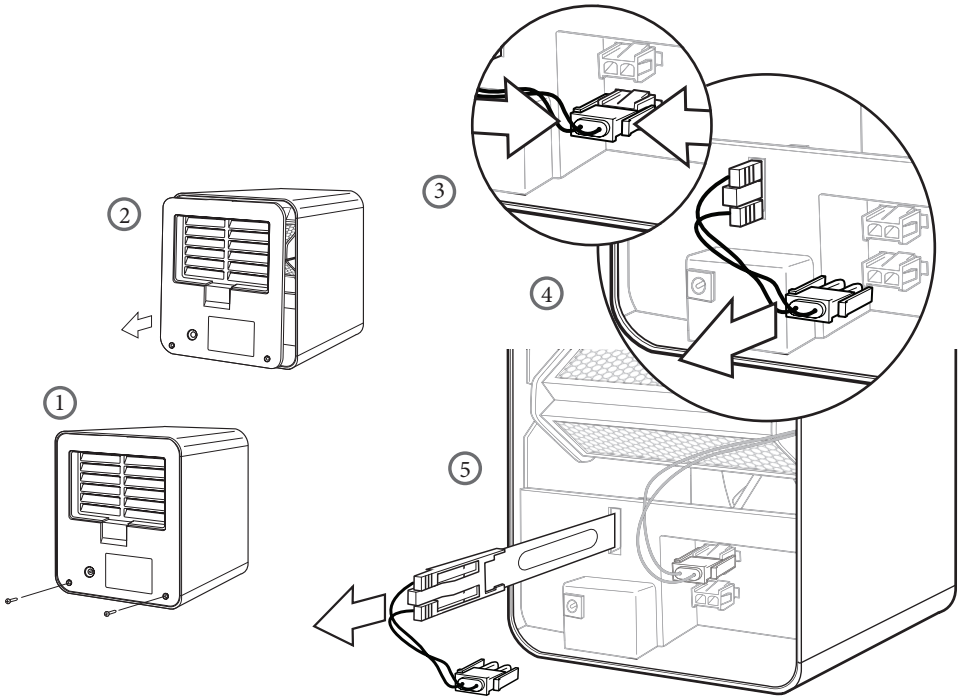

Fig. 10

8.4 How to clean the purifier plate:

ALWAYS unplug the power cord from the back of your Pure Air Box before doing any maintenance. Removing the cover may expose ultraviolet light source. To protect against eye damage, always unplug before doing any maintenance.

Unplug unit. (1) Remove the back panel screws and (2) back panel.

(3 - 5) Remove the purifier plate from its slot.

(6) Clean purifier plate by wiping with a cotton cloth dipped in denatured alcohol. Allow purifier plate to dry completely before reinstalling.

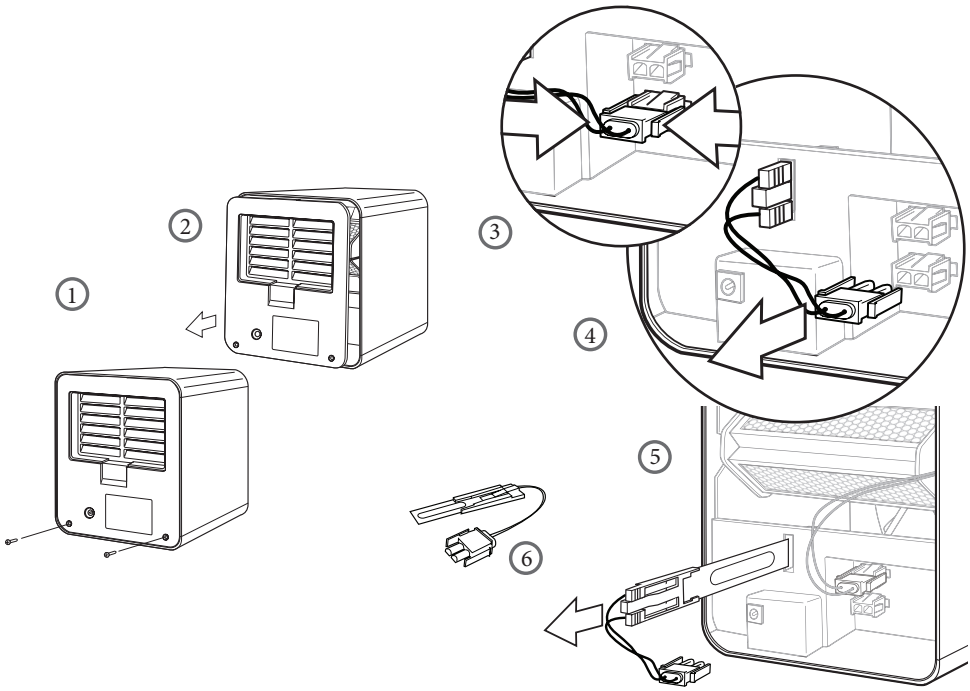

Fig. 11

Where you see this symbol on any of our electrical products or packaging, it indicates that the relevant electrical products should not be disposed of as general household waste in Europe. To ensure the correct waste treatment of the product, please dispose of it in accordance with any applicable local laws or requirements for disposal of electrical equipment. In so doing, you will help to conserve natural resources and improve standards of environmental protection in treatment and disposal of electrical waste.

GUARANTEE

MARSAN INDUSTRIAL, S.A. guarantees that the devices comply with the contracted specifications.

This warranty only covers the model of heater showed on the valid invoice.

Such rectifications will be guaranteed against any manufacturing and operating defect for the normal and domestic use of this product, for a period of 24 months as from the purchase date shown on the invoice.

HAVERLAND guarantees against material, design or manufacturing faults at the moment of its original acquisition for 2 years.

This warranty only covers the device whose model appears on the purchase invoice.

This warranty DOES NOT COVER incorrect installation, maintenance, cleaning or conserving the device, and neither does it cover failures and faults due to force majeure, chemical agents or atmospheric phenomena, incorrect use of the device, the purchaser's faulty electrical installations, transporting the device or problems caused by the device being handled by persons not authorised by MARSAN INDUSTRIAL, S.A.

This warranty must not be modified, altered or extended, and the Manufacturer does not authorise anybody to act on his behalf to modify, alter or extend it.

This warranty applies only to the Product. If a valid serial number is missing from the product, the warranty will be voided.

To repair the device, the consumer must dial the Technical Assistance Service at 0330 3651940 or send an email to haverland@haverland.co.uk and ask for the information needed about the procedure to follow:

For a replacement, cancellation or price reduction, when in order, the consumer must go the establishment where the device was purchased. This warranty does not affect the consumers' rights as established in the provisions contained In Ley 23/2003, the Consumer Goods Sales Guarantee Act.

Customer Service Telephone:
0330 3651940

E-mail: haverland@haverland.co.uk

Haverland UK Limited
Challengue House
Sherwood Drive
Bletchley MK3 6DP

Made in Spain

Marsan Industrial, S.A. reserves the right to modify without previous warning

Pure Air Box
by HAVERLAND®

- The use of this appliance is not an alternative to any medical treatment.
- Do not forget to follow your country's health services recommendations.
- Ventilate the rooms daily.
- Maintain good hand hygiene.

* Ask your distributor for spare parts.

heatershop
HEATING YOUR HOME FOR LESS

www.heatershop.co.uk
01473 276686